COMPASS MANUFACTURING INTERNATIONAL
Freendo Faucets

# Grand - Two Handle Bathroom Faucet

* 4″ Center-set, 3 Hole Installation
* Includes Brass Pop-up Drain
* 3-9/16″ High and 4-7/16″ Long One Piece Solid Cast Brass Spout, Zinc Handle, Zinc Deck Plate
* Solid Brass Waterway Construction with 1/2" -14 NPSM Connection
* 1/4 Turn Premium Grade Ceramic Cartridges (Type I)
* Flow Rate: 1.2GPM @ 60PSI
* 100% Pressure System Tested
* Lifetime Limited Warranty; 5 year warranty from date of purchase for Commercial users.

| | |
|---|---|
| Project / Job Name | |
| Architect / Engineer | |
| Contractor | |
| Model | |
| Quantity | |

## Model No. :

☐ 201-6592 (CH) (Shown Model)
☐ 201-6593 (BN *Spotless* PVD)
☐ 201-6594 (ORB)

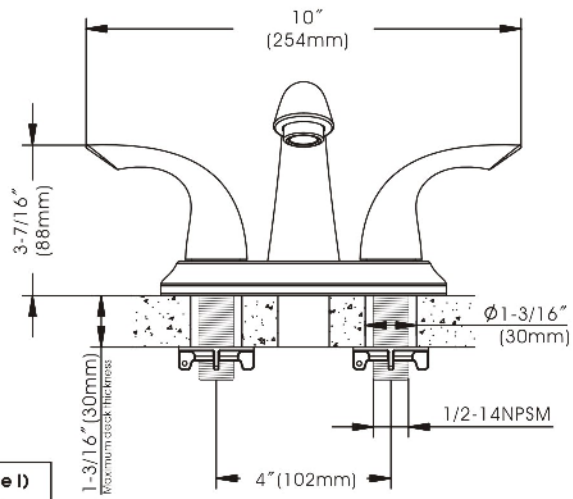


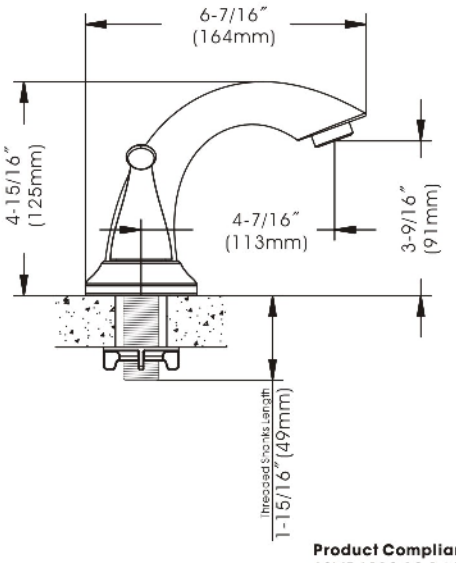


**Cartridge (Type I)**

**Product Compliance:**
- ASME A112.18.1 / CSA B125.1
- NSF 61 - Section 9
- NSF 372 (Low Lead Content)
- ANSI A117.1 (ADA)
- EPA - Water Sense


**Compass Manufacturing International LLC**
www.cmiproduct.com 6702 Enterprise Drive, Louisville, Kentucky 40214 Toll Free Number: 800-626-3525



Revised 11/20/18

Compass Manufacturing International
Freendo Faucets

# Grand - Two Handle Bathroom Faucet

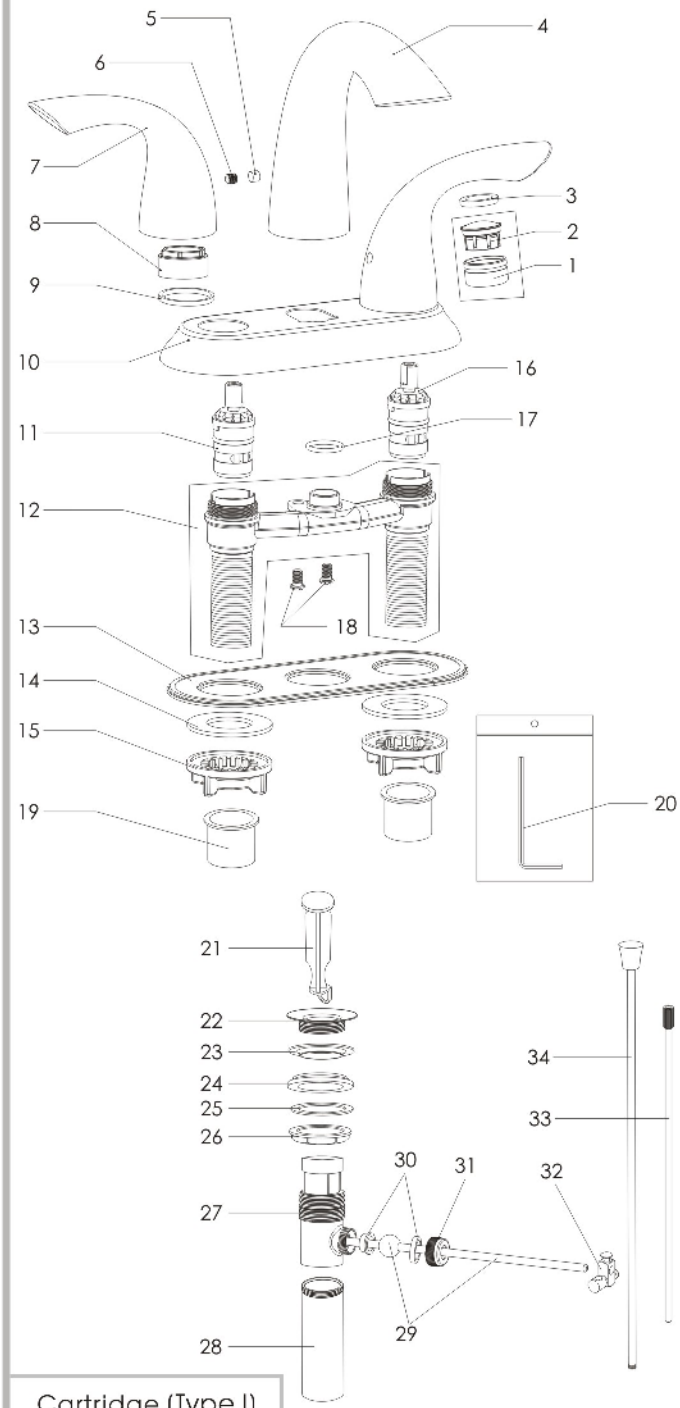


Cartridge (Type I)

**Model No. :**

201-6592 (Polished Chrome)

201-6593 (Brushed Nickel Spotless PVD)

201-6594 (Oil-Rubbed Bronze)

| No. | Part Name | Material |
|---|---|---|
| 1 | Aerator Collar | Brass |
| 2 | Aerator Core | Plastic |
| 3 | Washer | Rubber |
| 4 | Spout | Brass |
| 5 | Button | Rubber |
| 6 | Set Screw | Stainless Steel |
| 7 | Handle | Zinc |
| 8 | Cartridge Lock Nut | Zinc |
| 9 | Plastic Washer | Plastic |
| 10 | Deck Plate | Zinc |
| 11 | Cartridge(Hot Water) | Ceramic |
| 12 | Brazed Underbody | Brass |
| 13 | Putty Plate | Plastic |
| 14 | Washer | Rubber |
| 15 | Plastic Lock Nut | Plastic |
| 16 | Cartridge(Cold Water) | Ceramic |
| 17 | O-Ring | Rubber |
| 18 | Screw | Stainless Steel |
| 19 | Protective Sleeve | Plastic |
| 20 | Allen Key | Steel |
| 21 | Drain Stopper | Plastic+Brass |
| 22 | Flange | Brass |
| 23 | Top Rubber Washer | Rubber |
| 24 | Bottom Rubber Washer | Rubber |
| 25 | Washer | Plastic |
| 26 | Lock Nut | Zinc |
| 27 | Drain Body | Brass |
| 28 | Tailpiece | Stainless Steel |
| 29 | Horizontal Rod | Plastic+Stainless Steel |
| 30 | Rod Ball Plastic Gasket | Plastic |
| 31 | Rod Guide Nut | Brass |
| 32 | Fittings | Brass |
| 33 | Extend Rod | Stainless Steel |
| 34 | Lift Rod | Brass |

Technical Support: warranty@cmiproduct.com
Hour of Operation: Mon - Fri 8:30 a.m - 5:00 p.m. EST


**Compass Manufacturing International LLC**
www.cmiproduct.com 6702 Enterprise Drive, Louisville, Kentucky 40214 Toll Free Number: 800-626-3525



Revised 11/20/18